P300 PERIMETER SERIES

7' Arched Pinched Security Top

Welded Steel Ornamental Fence Panel — Engineered System Specification

SKU	MODEL	COVERAGE
IF-P300-7AP-BK	P300-7AP	7.83 ft

PANEL DRAWING

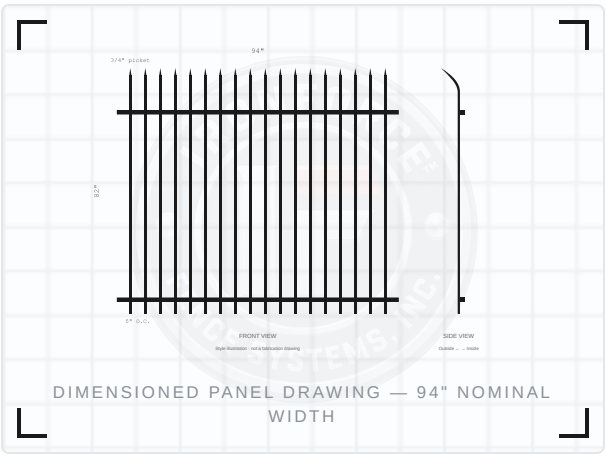

DIMENSIONED PANEL DRAWING — 94" NOMINAL WIDTH

MATERIAL & CONSTRUCTION

Series	**P300 Perimeter — Perimeter**
Nominal Height	**7'**
Overall Panel Size	**82 x 94 in**
Top Style	**Arched Pinched Security Top**
Picket Spec	**3/4 x 3/4 in, 16 ga**
Rail Spec	**1-1/2 x 1-1/2 in, 14 ga**
Picket Count	**18 pickets**
Picket Spacing	**5 in O.C.**
Panel Coverage	**94 in (7.83 ft) per panel**
Construction	**Fully welded steel**

IRONFORCE TRIPLE PROTECTION™

LAYER 1 · BASE — 1

Pre-Galvanized Steel

Zinc-coated steel substrate forms the corrosion-resistant foundation of every welded panel.

LAYER 2 · BOND — 2

Primer Layer

An intermediate primer coat improves adhesion and adds a second barrier against the elements.

LAYER 3 · FINISH — 3

Black Powder-Coat Finish

A durable IronForce Black powder-coated topcoat delivers a clean, uniform, professional finish.

Triple Protection™ describes the standard IronForce coating system. Standard stocked color is Black; custom colors are available by quote.

MATCHED SYSTEM COMPONENTS

ITEM	DESCRIPTION
Panel	7' Arched Pinched Security Top P300-7AP
Matched Post	2-1/2 x 2-1/2 x 10 ft 11 ga Post (2.5 x 2.5 x 10 ft, 11 ga) IF-P300-P10-BK
Mounting Kit	C200/P300 Panel Mounting Kit - 4 Pack IF-BRK-150-4PK-BK

Standard post rule for this series: Panel height + 3 ft. A complete run also includes end/corner posts and mounting kits sized to your layout.

WHAT'S AVAILABLE

Series Heights	**7', 8'**
Top Styles	**Flat Top · Pinched Security · Arched Pinched Security**
Standard Color	**IronForce Black**
Custom Colors	**Available by quote**
Post Rule	**Panel height + 3 ft**

WARRANTY & TRAINING

2-Year Limited Panel Warranty

Standard on every panel: 100% replacement credit in Year 1, 75% replacement credit in Year 2.

Free Installation Training

Free online IronForce installation training is included with qualifying complete system purchases — so your crew installs it right the first time.

Protect 15™ COMPLETE SYSTEMS

Qualifying complete IronForce systems earn prorated, panel-only coverage through Year 15 — built with correct IronForce panels, approved posts, and approved mounting components documented on the order.

Fulfillment & Support

Fulfilled by Las Vegas Fence · NV Contractor #81535 · 30+ years of fabrication experience. Get an exact system quote at ironforcefence.com.